Código artículo 86.A004.2401.03

1

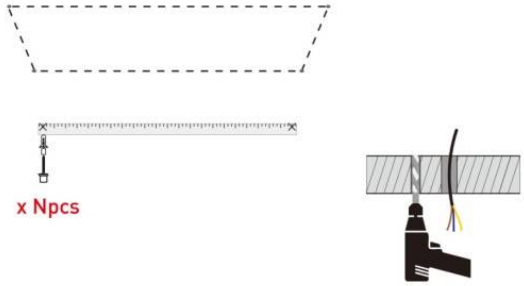

First, make marks on the ceiling,then dig holes.

2

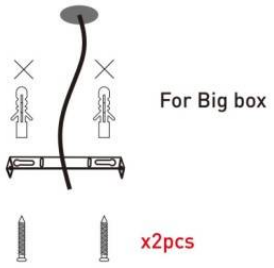

Second, fixed the terminals of the pendant suit and box holder with screws

3

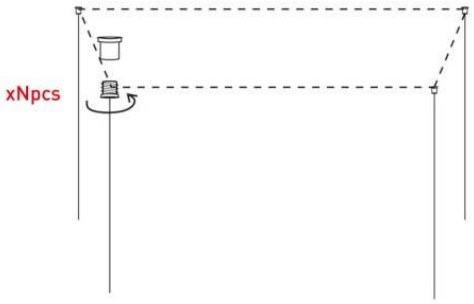

Install the terminals of the pendant suit.

4

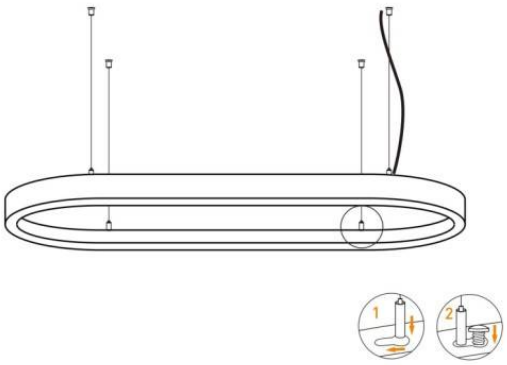

Install the lamp as the picture shows.

5a If the driver is dimming & external installation

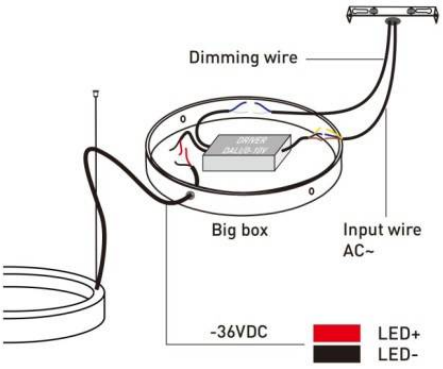

Connect the wires correctly as above showing.

5b If the driver is non-dimming & external installation

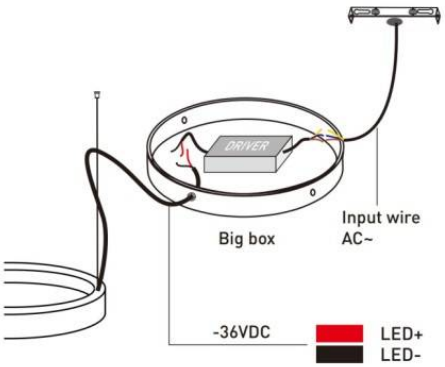

Connect the wires correctly as above showing.

6

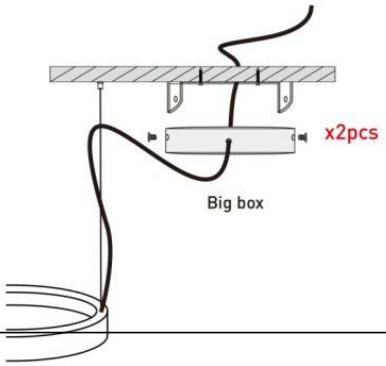

Install the bigbox as above showing.
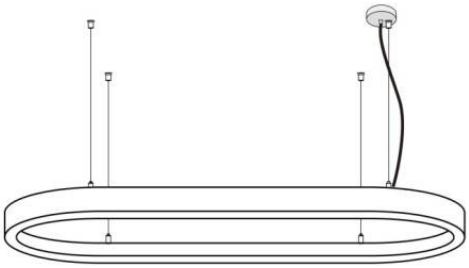
7